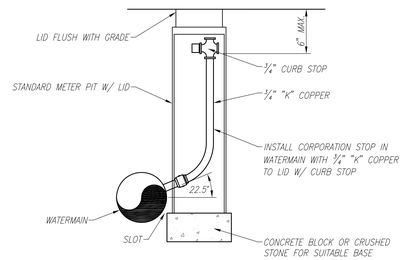

NOTE:

1. UPON SATISFACTORY COMPLETION OF ALL TESTING THE METER PIT AND COPPER TUBING WILL BE REMOVED. THE CORPORATION STOP AT THE WATER MAIN WILL BE CAPPED WITH A WATERTIGHT FITTING. BACKFILL AS REQUIRED.

CHLORINATION/SAMPLE TAP DETAIL TEMPORARY

NOT TO SCALE

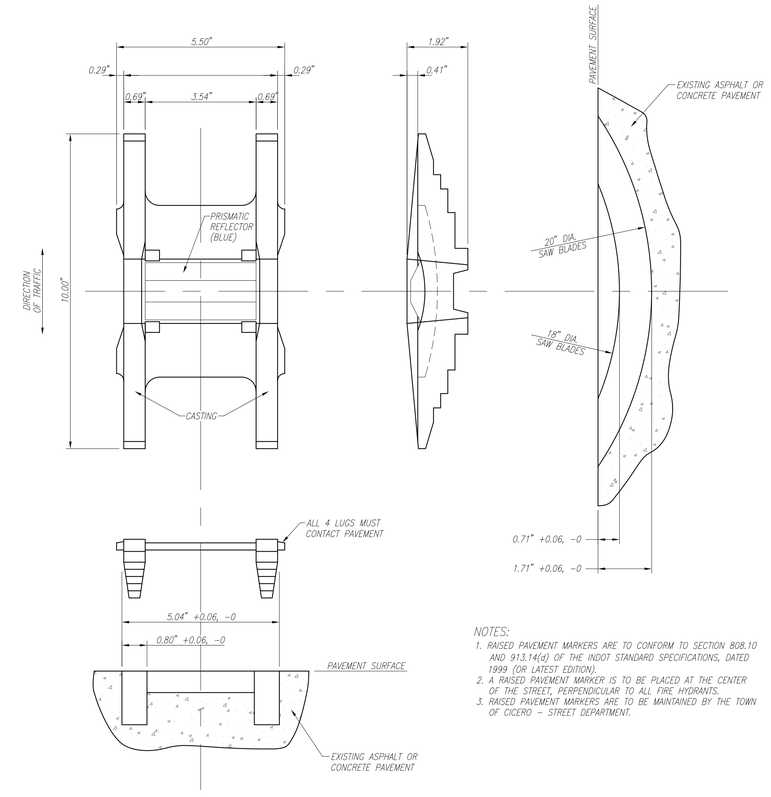

NOTES:

1. RAISED PAVEMENT MARKERS ARE TO CONFORM TO SECTION 808.10 AND 913.14(d) OF THE INDOT STANDARD SPECIFICATIONS, DATED 1999 (OR LATEST EDITION).
2. A RAISED PAVEMENT MARKER IS TO BE PLACED AT THE CENTER OF THE STREET, PERPENDICULAR TO ALL FIRE HYDRANTS.
3. RAISED PAVEMENT MARKERS ARE TO BE MAINTAINED BY THE TOWN OF CICERO – STREET DEPARTMENT.

RAISED PAVEMENT MARKER

NOT TO SCALE

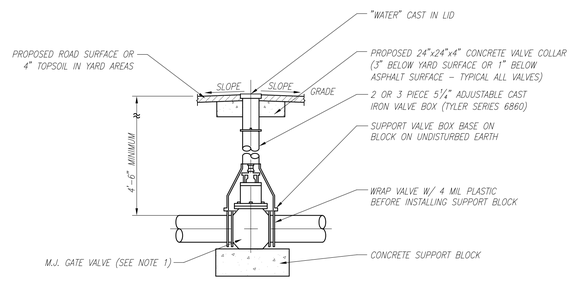

NOTES:

1. ALL RESILIENT WEDGE GATE VALVES SHALL BE EITHER AMERICAN FLOW CONTROL 2500, US PIPE METROSEAL 250, WATEROUS COMPANY SERIES 500 OR MUELLER A-2360.
2. ALL GATE VALVES SHALL BE ASSEMBLED WITH FACTORY INSTALLED STAINLESS STEEL BOLTS.
3. ALL VALVES SHALL OPEN COUNTERCLOCKWISE.
4. 2-PIECE C.I. VALVE BOXES TO BE USED. 3-PIECE ALLOWED ONLY WHEN EXCESSIVE DEPTH IS REQUIRED AND HAS BEEN APPROVED BY THE TOWN.
5. CONSULT TOWN ENGINEER FOR VALVES WITH BURY DEPTH IN EXCESS OF 10 FEET. USE LONGER MODEL FOR DEPTH GREATER THAN MINIMUM.

GATE VALVE INSTALLATION DETAIL

NOT TO SCALE

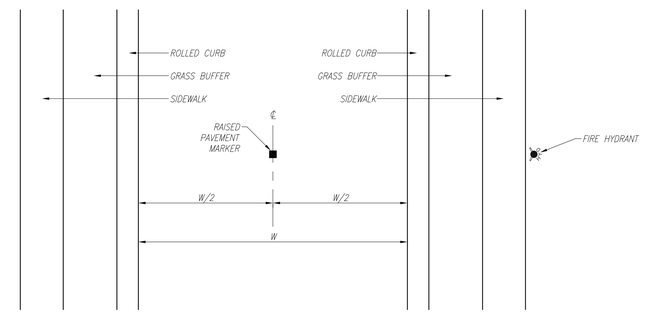

LOCATION OF MARKER IN STREET

NOT TO SCALE

JUNE 2010

UNITED Consulting
1633 N. Post Road
Indianapolis, Indiana 46219
Phone: 317-805-2500
Fax: 317-805-2506
Web: www.uncinfo.com

CONSTRUCTION STANDARDS

WATER SYSTEM DETAILS AND NOTES

TOWN OF CICERO, INDIANA

P.O. BOX 391
CICERO, IN 46034

REVISIONS

Rev. No.	Description	Date

CERTIFIED BY:

Scale: AS NOTED

Sheet: 12 of 17

Date: 8/11/09

File Name:P:\LDD2\08-904-10 Cicero - Construction Standards\DWG\HYDRANT MARKER DETAILS.dwgPlot Date:5/11/2010 1:20:23 PMPlotted By:stephens, george