JUNE 2010

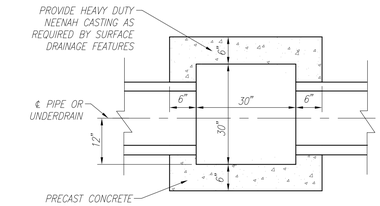

TOP VIEW

NOTES:

1. SEE PLANS FOR CASTING SIZE AND TYPE.
2. ALL CONNECTING PIPES SHALL BE GROUTED WITH A 6" CONCRETE COLLAR WITH 3500 psi CONCRETE.
3. REINFORCEMENT SHALL CONFORM TO ASTM A-615, GRADE 40. CONCRETE FOR PRECAST UNITS SHALL CONFORM TO ASTM C-478.
4. THE CATCH BASIN SHALL BE BACK-FILLED PER PLANS AND SPECIFICATIONS.
5. THE COST OF THE CATCH BASIN SHALL INCLUDE ALL OF THE ABOVE ITEMS.

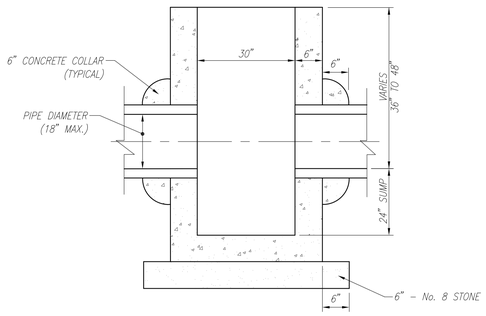

SIDE VIEW

CATCH BASIN, TYPE A

SCALE: NONE

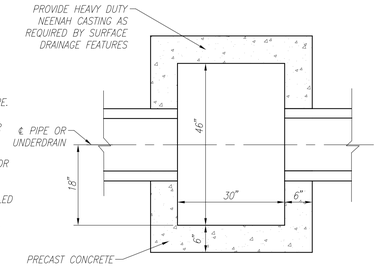

TOP VIEW

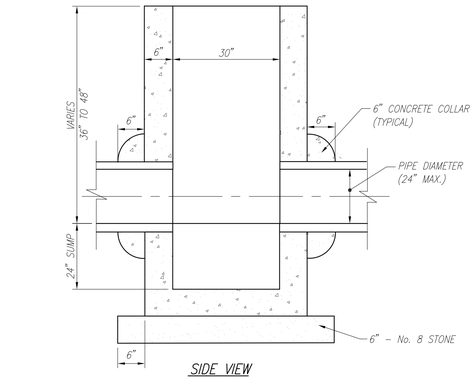

SIDE VIEW

CATCH BASIN, TYPE B

SCALE: NONE

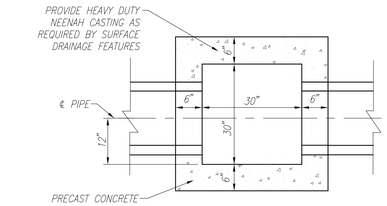

TOP VIEW

INLET NOTES:

1. SEE PLANS FOR CASTING SIZE AND TYPE.
2. ALL CONNECTING PIPES SHALL BE GROUTED WITH A 6" CONCRETE COLLAR WITH 3500 psi CONCRETE.
3. REINFORCEMENT SHALL CONFORM TO ASTM A-615, GRADE 40. CONCRETE FOR PRECAST UNITS SHALL CONFORM TO ASTM C-478.
4. THE INLET SHALL BE BACK-FILLED PER PLANS AND SPECIFICATIONS.

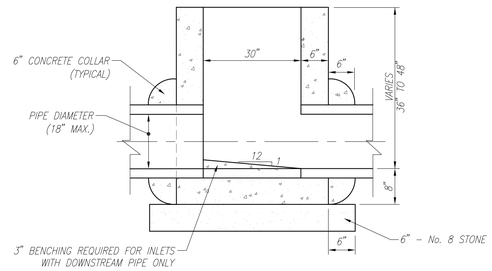

SIDE VIEW

INLET, TYPE A

SCALE: NONE

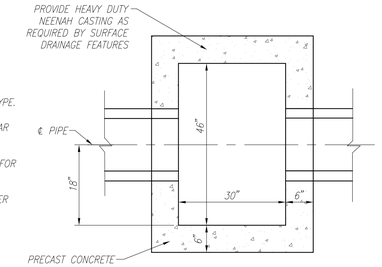

TOP VIEW

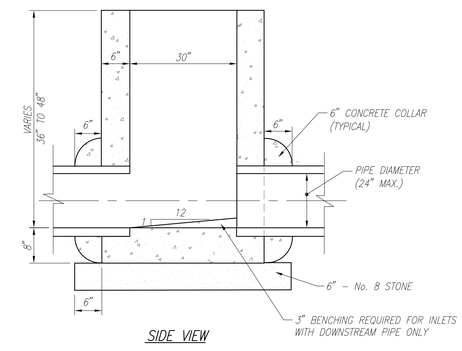

SIDE VIEW

INLET, TYPE B

SCALE: NONE

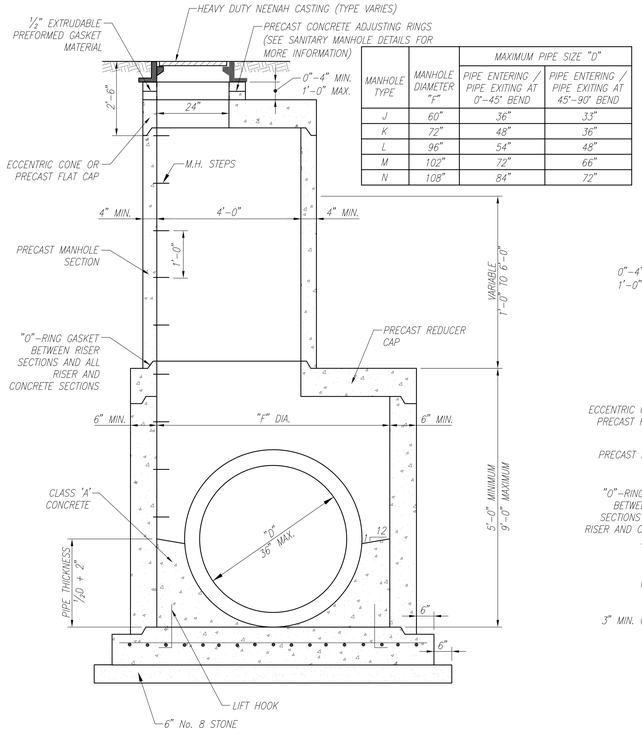

MANHOLE TYPE	MANHOLE DIAMETER "F"	MAXIMUM PIPE SIZE "O"	
		PIPE ENTERING / PIPE EXITING AT 0°-45° BEND	PIPE ENTERING / PIPE EXITING AT 45°-90° BEND
J	60"	36"	33"
K	72"	48"	36"
L	96"	54"	48"
M	102"	72"	66"
N	108"	84"	72"

MANHOLES, TYPE J, K, L, M and N

SCALE: NONE

MAXIMUM PIPE SIZE "O"	
PIPE ENTERING / PIPE EXITING AT 0°-45° BEND	PIPE ENTERING / PIPE EXITING AT 45°-90° BEND
24"	21"

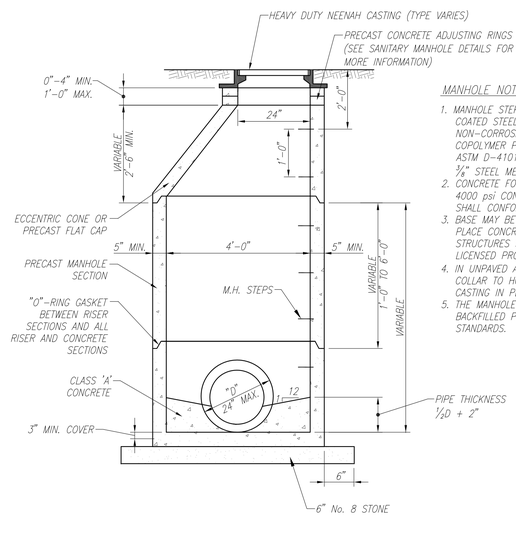

MANHOLE NOTES:

1. MANHOLE STEPS SHALL BE POLYPROPYLENE COATED STEEL REINFORCING OR APPROVED NON-CORROSIVE FIBERGLASS MATERIAL COPOLYMER POLYPROPYLENE SHALL MEET ASTM D-4101 REINFORCED WITH DEFORMED ⅞" STEEL MEETING ASTM A-615, GRADE 60.
2. CONCRETE FOR POURED BASE SHALL BE 4000 psi CONCRETE. PRECAST CONCRETE SHALL CONFORM TO ASTM C-478.
3. BASE MAY BE PRECAST OR POURED IN PLACE CONCRETE. CAST-IN-PLACE STRUCTURES SHALL BE CERTIFIED BY A LICENSED PROFESSIONAL ENGINEER.
4. IN UNPAVED AREAS USE A 6" CONCRETE COLLAR TO HOLD GRADE RINGS AND CASTING IN PLACE.
5. THE MANHOLE AND STRUCTURES SHALL BE BACKFILLED PER TOWN OF CICERO STANDARDS.

MANHOLE, TYPE C

SCALE: NONE

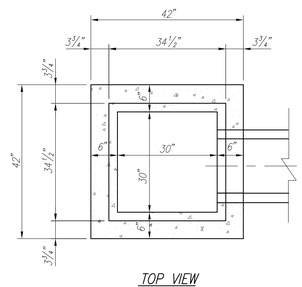

TOP VIEW

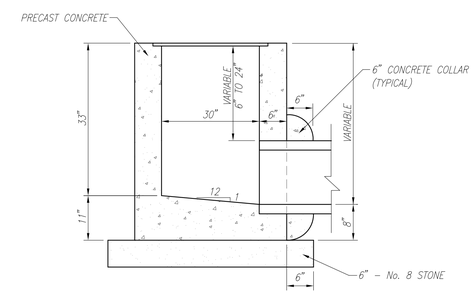

SIDE VIEW

INLET, TYPE E

SCALE: NONE

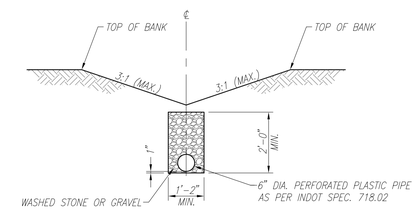

NOTES:

1. UNDERDRAINS REQUIRED FOR ALL VEGETATED SWALES WITH SLOPE BETWEEN 0.5% AND 1%.
2. SWALES WITH SLOPE BETWEEN 0.2% AND 0.5% SHALL BE CONCRETE LINED. (SEE DETAIL THIS SHEET). REVIEW OF CONCRETE SWALES WILL BE ON A CASE BY CASE BASIS.

SWALE UNDERDRAIN DETAIL

SCALE: NONE

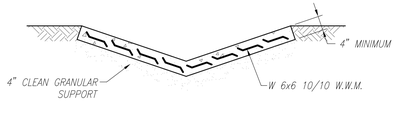

NOTE:
1. CONFIGURATION VARIES.

CONCRETE CHANNEL DETAIL

SCALE: NONE

UNITED Consulting
10635 N. Pest Road
Indianapolis, Indiana 46219
Phone: (317) 895-2500
Fax: (317) 895-2506
Web: www.unitedcc.com

CONSTRUCTION STANDARDS

STORM SEWER DETAILS AND NOTES

TOWN OF CICERO, INDIANA
P.O. BOX 391
CICERO, IN 46034

REVISIONS

Rev. No.	Description	Date

CERTIFIED BY:

Scale: AS NOTED

Sheet: 6 of 17

Date: 8/11/09

File Name:P:\LDD2\08-904-10 Cicero - Construction Standards\DWG\STORM SEWER DETAILS AND NOTES.dwgPlot Date:5/11/2010 11:42:41 AMPlotted By:stephens, george